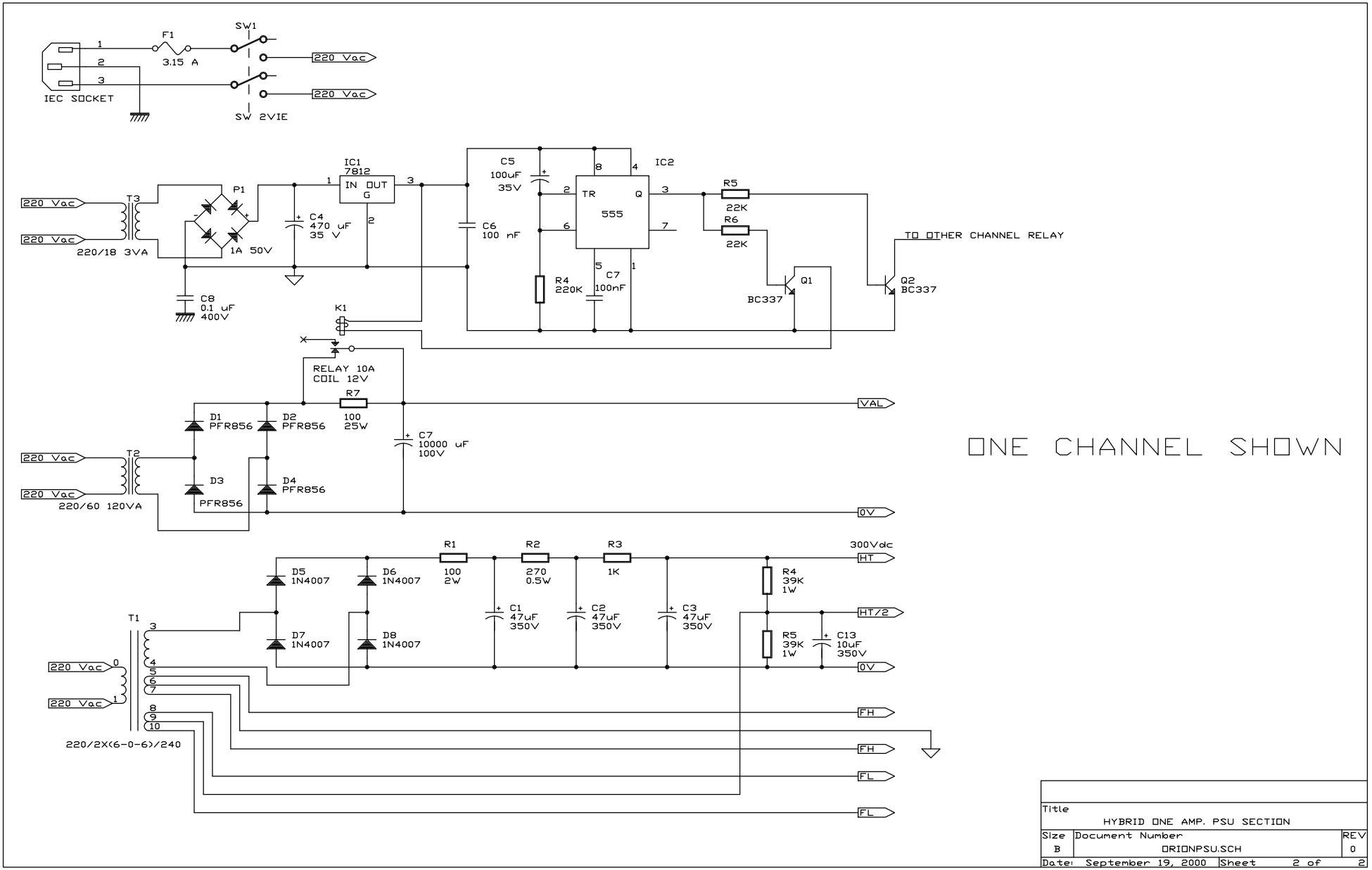

ONE CHANNEL SHOWN

Title	HYBRID ONE AMP. PSU SECTION	
Size B	Document Number ORIONPSU.SCH	REV 0
Date: September 19, 2000	Sheet 2 of 2	